1.3 ???ZF??????????

ZF □□□□□□□

□□□ ZF □□□□□□□□□□□□□ NW □□□□□□□□□□□□□

1) □□□□□□□□□□□□□□□□□□□□ 50%□□□□□□□□□□□□□□□□□□□□

2) □□□□□□□□□ 50%□□□□□□□□□□□□□

3) □□□□□□□□□□□□□□□□□□□□□□□□□□□□□□□□□□

□□ Indi□□□□□□□□□□□□□□□□□□

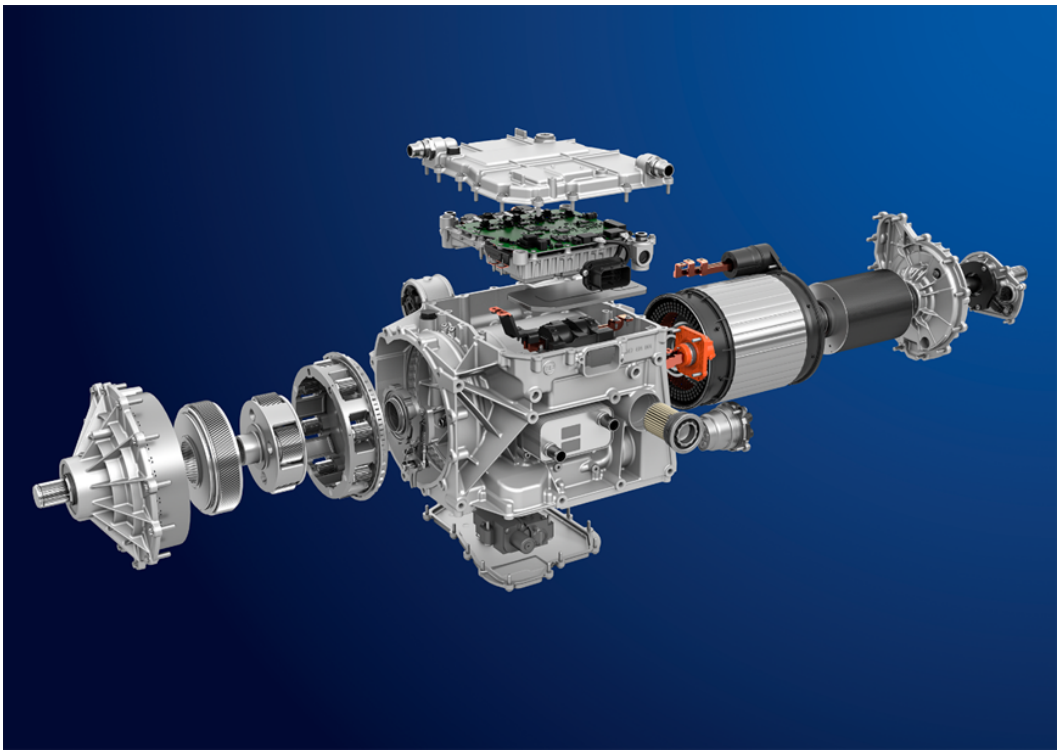

ZF Indi □□□□□□

ZF Indi□□□□□□□□□□□□□ NGW □□□□□□□□□□□□□□□□□□□□

□□□□ □□□□□□□□□□□□

□□□□□□□□□□□ Simple Planetary Gear Train□□□□□□□□□□□

$$n_S + \alpha\, n_R = (1 + \alpha) n_{PC}$$

□□□

n_s □□□□□□

n_R □□□□□□

n_{PC} □□□□□□□□□□

α □□□□□□□□□□

$$\alpha = \frac{Z_R}{Z_S}$$

□□□□□□□□□□□

□□□□

$$n_{S2} + \alpha 2\, n_{R2} = (1 + \alpha 2) n_{PC2}$$

□□□□□□□□□□□□□□

$$n_{R1} = n_{S2}$$

□□□□□□□□□□□ 0□

$$n_{PC2} = 0$$

□□□

$$\alpha 1 = \frac{Z_{R1}}{Z_{S1}}$$
$$\alpha 2 = \frac{Z_{R2}}{Z_{S2}}$$

□□□□□□□□□□□□

$$n_{S1} = (1 + \alpha 1) n_{PC1} + \alpha 1\, \alpha 2\, n_{R2}$$

□□□□□

□□□□□□□□□□□□□□ /□□□□□□□□□□□□ n_S1 □□□□□□□□□□□□□□□□□□□□□□□□ n_pc1□□□□□□□□□□□□□ → □□□□ n_R2

□□□□□□□□□□□□□□□□□□□

□□□□□□□□□

$$i = \frac{n_{S1}}{n_{PC1}} = \frac{n_{S1}}{n_{n_{R2}}} = (1 + \alpha 1) + \alpha 1\, \alpha 2$$

□□□□ - □□□□

□□□□□□□□□ PC1 □ R2 □□□□□□□□□□□□□□□□ n_PC1 □ n_R2 □□□□□□□□□□□□□□□□

□□□ × □□□□□

$$T_{S1}n_{S1} = T_{PC1}n_{PC1} + T_{R2}n_{R2}$$

□□□□□□□□□

$$T_{PC1} = (1 + \alpha 1)T_{S1}$$
$$T_{R2} = \alpha 1\ \alpha 2\ T_{S1}$$

□□□□□□□□□

$$\frac{T_{PC1}}{T_{R2}} = \frac{(1 + \alpha 1)}{(\alpha 1\ \alpha 2)}$$

□□□□□□ □□□□□□□□□ **1+ α1 = α1 x α2** □□□ □□□□□□□□□□□□

ZF Indi □□□□□□□

□□□□□□□□□□□□□□□□□□□□

□□	□□□□□□□□					
□□□□						
□□□□						
□□□□						
□□□□						
□□□□						
□□□□						
□□□□						
□□□□□□□□						
□□	**□□□ S1**	**□□□ P1**	**□□ R1**	**□□□ S2**	**□□□ P2**	**□□ R2**
□□□□	36	49	136	151	20	193
□□						
□□	1+ 136/36+ 136/36 x 193/151 = 9.606					
□□□□						
□□□						
□□□						
□□□						
□□						
□□□						

□□□□□

$$1 + \alpha 1 = 1 + \frac{136}{36} = 4.778$$

$$\alpha 1\ \alpha 2 = \frac{136}{36} \times \frac{193}{151} = 4.829$$

□□□□□□□□□□□□□□□□□□□□□□□□

$$\frac{T_{PC1}}{T_{R2}} = \frac{(1 + \alpha 1)}{(\alpha 1\ \alpha 2)} = 0.9895$$

□□□□□ T_{s1} =520Nm□□□

$$T_{PC1} = (1 + \alpha 1) T_{S1} = 2484 Nm$$

$$T_{R2} = \alpha 1\ \alpha 2\ T_{S1} = 2510 Nm$$

□□□□□□□

$$\Delta T = |T_{PC1} - T_{R2}| = 26 Nm$$

□□□□□□□□□□□□□□□□□□□

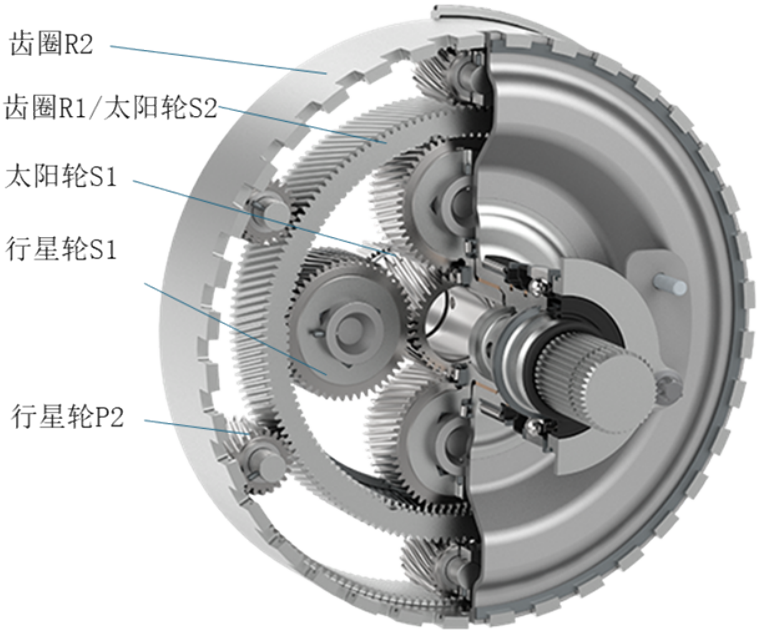

齿圈R2
齿圈R1/太阳轮S2
太阳轮S1
行星轮S1
行星轮P2

版本号 #5
由 Admin 创建于 2026-02-07 23:06:00 CST
由 Admin 更新于 2026-02-09 17:10:04 CST